Avionics Mounting Devices

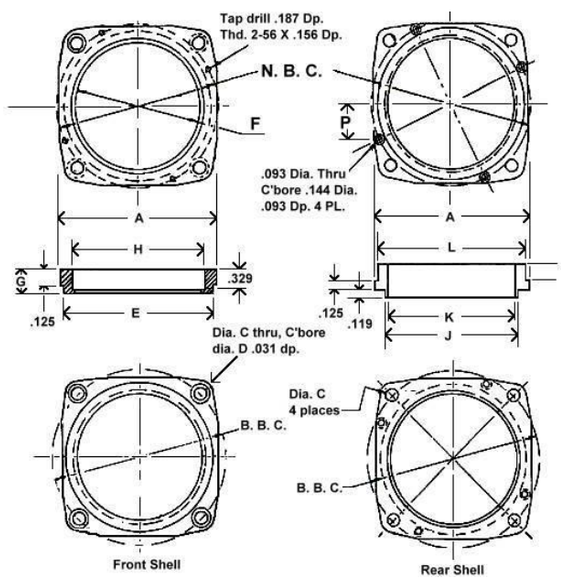

AMI	A	B	C	D	E	F	G	H	J	K	L	M	N	P
P/N	±.015	±.003	±.002	±.006	±.010	±.006	±.010	±.002	±.002	±.003	±.004	±.006	±.003	±.003
MS28055-2	2.375	2.625	0.170	0.281	2.245	1.875	0.375	2.017					2.437	0.538
MS28055-3	2.375	2.625	0.170						2.012	1.951	2.250	0.255	2.437	0.538
MS28055-4	1.735	1.855	0.149	0.237	1.490	1.438	0.505	1.580					1.724	0.381
MS28055-5	1.735	1.855	0.149						1.575	1.513			1.724	0.381
MS28055-6	2.375	2.625	0.170	0.281	2.245	1.875	0.375	2.017					2.437	0.538
MS28055-7	2.375	2.625	0.170						2.012	1.951	2.250	0.255	2.437	0.538
MS28055-8	3.250	3.500	.170	.281	3.120	3.105	.505	3.247					3.413	
MS28055-9	3.25	3.54	.170						3.242	3.143	n/a	0.0	3.413	
MS28055-1 CONSISTS OF: (1) MS28055-2, (1) MS28055-3, ASSEMBLY & MOUNTING HARDWARE											NSN 6695-00-683-9425			
MS28055-10 CONSISTS OF: (1) MS28055-4, (1) MS28055-5, ASSEMBLY & MOUNTING HARDWARE														
MS28055-11 CONSISTS OF: (1) MS28055-6, (1) MS28055-7, ASSEMBLY & MOUNTING HARDWARE											NSN 6695-00-855-8594			
MS28055-12 CONSISTS OF: (1) MS28055-8, (1) MS28055-9, ASSEMBLY & MOUNTING HARDWARE											NSN 6695-00-762-5690			